CPS ALPHA SERIES
MADE IN THE UK

AP30/S – AP60/S

Three Phase, 30–60 kVa

Water Cooled | Three Phase | 50Hz | Non-Compliant | Diesel

	Generator Ratings (Prime/Standby)		
	AP30/S	AP45/S	AP60/S
PRIME POWER:	**30 kVA** 24 kW	**45 kVA** 36 kW	**60 kVA** 48 kW
STANDBY POWER:	**33 kVA** 26 kW	**50 kVA** 40 kW	**66 kVA** 53 kW
RPM:	1500	1500	1500
POWER FACTOR:	0.8	0.8	0.8

CPS Alpha AP Series – With Perkins Engines coupled to Stamford or Meccalte Alternators.
Our diesel generators are available as an opentype or built in to soundproof canopies.
Please contact CPS on **+44 (0) 1757 428 140** for full specification and details.

CPS
ALPHA SERIES
MADE IN THE UK

AP30/S – AP60/S

Three Phase, 30–60 kVa

CANOPY GENERATORS

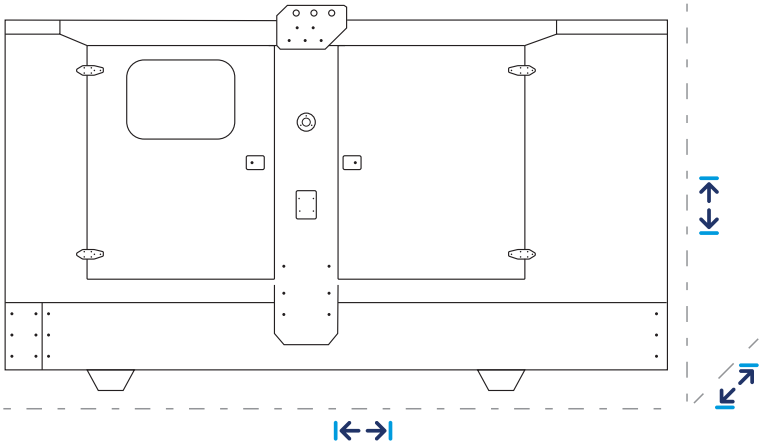

	Dimensions & Weights		
	AP30/S	AP45/S	AP60/S
↔	2200	2200	2200
↙↗	900	900	900
↕	1510	1510	1510
KG	1100	1350	1350

UK / EU Components.

Security and Safety

- Control panel viewing window in a lockable access door
- Emergency stop push button mounted on enclosure exterior
- Cooling fan and battery charging alternator fully guarded
- Fuel fill point lockable with fuel breathing apparatus
- Residential exhaust muffler mounted inside canopy
- Multi-density polyester soundproofing material – Fire resistant Class 1.

Excellent Service and Maintenance Access

- Large doors for easy servicing
- Radiator filling point on the roof (UK Standard)
- Colour coded wiring looms.

Transportability

- Lift hooks/Forklift space strong enough to support whole generator.

Specific Canopy Features:

As standard all our units come with an **Emergency Stop Button** on the outside, for health and safety reasons.

High quality **Push Button Door Locks** for easy access to the generator. All door locks are lockable giving extra protection.

Our generators are easy to re-fuel and are fitted with a **Fuel Breathing Pipe** as standard.

Water Filling Point on the roof, to make easy access point for water filling.

CPS ALPHA SERIES
MADE IN THE UK

AP30/S – AP60/S

Three Phase, 30–60 kVa

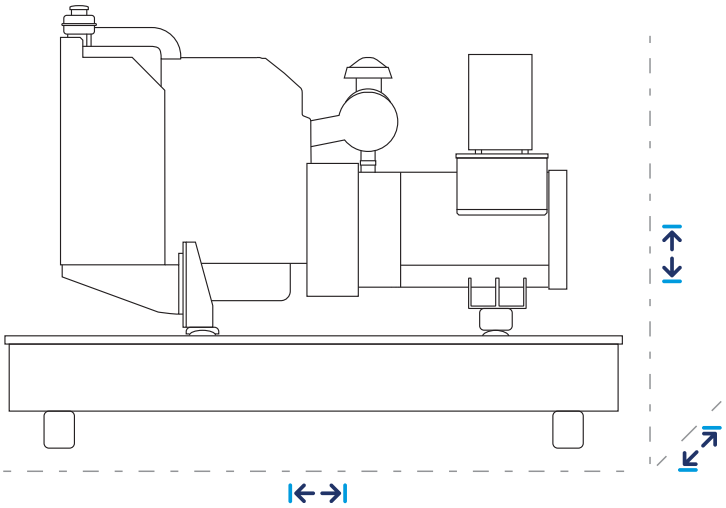

OPEN TYPE GENERATORS

	Dimensions & Weights		
	AP30/S	AP45/S	AP60/S
↔	1550	1640	1640
↙↗	750	750	750
↕	1310	1420	1420
KG	800	1000	1000

UK / EU Components.

Key Features

- Skid base manufactured from high grade steel
- Colour coded wiring looms (to aid maintenance)
- High quality, noise reducing silencer
- Anti vibration mounts, for the engine and alternator
- Mechanical fuel gauge for ease of checking
- Large robust fuel tank to provide a minimum of 8 hour operation time
- Easy fuel filling point
- Forklift space strong enough to support whole generator.

Security and Safety

- Lockable control panel
- Emergency stop button
- Cooling fan and battery charging alternator fully guarded.

Specific Open Type Features:

External Fuel Gauge allows for easy monitoring and filling.

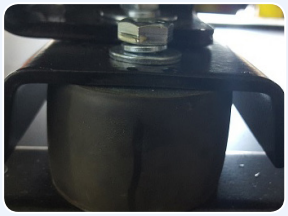

UK Anti-Vibration Mounts, for the engine and alternator, to ensure the longevity of your generator.

High quality, noise reducing **Silencer.**

Large robust **fuel tank** to provide a minimum of 8 hour operation time (5-690kva)

CPS
ALPHA SERIES
MADE IN THE UK

AP30/S – AP60/S

Three Phase, 30–60 kVa

		Fuel Consumption & Sound Levels		
		AP30/S	AP45/S	AP60/S
TANK CAPACITY: (Litres)		100	100	100
FUEL CONSUMPTION: (Litres per Hour)	110%	8.1	11.7	15.9
	100%	7.2	10.8	14.6
	75%	5.61	8.23	10.8
SOUNDPROOFED CANOPY dBA RATINGS: (100%)	7M	65	65	65
	1M	77	77	77

	Engine Technical Data		
	AP30/S	AP45/S	AP60/S
ENGINE BRAND:	Perkins	Perkins	Perkins
ENGINE MODEL:	1103A-33G	1103A-33TG1	1103A-33TG2
INDUCTION:	Nat. Aspirated	Turbo Charged	Turbo Charged
COOLING:	Water Cooled	Water Cooled	Water Cooled
GOVERNOR TYPE:	Mechanical	Mechanical	Mechanical
CYLINDER:	3	3	3
BORE STROKE (mm):	105 x 127	105 x 127	105 x 127
COMPRESSION RATIO:	19.25:1	17.25:1	17.25:1
DISPLACEMENT: (L)	3.3	3.3	3.3
OIL CAPACITY:	8.3	8.3	8.3

		Alternator Technical Data		
		AP30/S	AP45/S	AP60/S
ALTERNATOR MODEL:	MeccAlte	ECP28-VL/4	ECP32-1M/4	ECP32-2M/4
	Stamford	S0L2P1	UC224D	UCI224E
BEARINGS:		1	1	1
WINDING PITCH:		2/3	2/3	2/3
WIRES:		12	12	12
CLASS:		H	H	H
VOLTAGE REGULATOR:		AREP/AVR	AREP/AVR	AREP/AVR
PROTECTION:		IP23	IP23	IP23

CPS
ALPHA SERIES
MADE IN THE UK

AP30/S – AP60/S

Three Phase, 30–60 kVa

AUTO START / MANUAL CONTROL PANEL (STANDARD)

Deep Sea Electronics is one of the world's top manufacturers of generator control, auto transfer switch and battery charger equipment. They employ over 120 people on four continents and supply Constant Power Solutions from their UK head office and production plant.

DSE4520 Manual Control Module

Please see Deep Sea PLC Control Module brochure for full specification.

DSE4520 Auto Mains Failure Control Module

Please see Deep Sea PLC Control Module brochure for full specification.

DSE7000 Series – Auto Mains Failure Control Module

Please see Deep Sea PLC Control Module brochure for full specification.

CPS
ALPHA SERIES
MADE IN THE UK

AP30/S – AP60/S

Three Phase, 30–60 kVa

OPTIONAL ACCESSORIES

Operation:

- Automatic Transfer Switches
- Manual Transfer Switches
- Automatic Fuel Transfer
- External Plug Sockets

Service & Maintenance:

- Minor & Major Service Parts
- Service Contracts (UK Customers)

Control:

- GSM Modem
- Remote Control Start

Further Options:

- Fuel Tanks – External/Large/Underground
- Bespoke Canopies (including Colour)
- Slow/Fast Trailer
- & Many More

GENERATOR ESSENTIAL SERVICE PARTS

As well as stocking a huge range of CPS Diesel generator parts, our CPS essential parts division supplies parts for all major brands and can dispatch them anywhere in the world– 24hrs a day, 7 days a week.

Your local dealer:

Constant Power Solutions Ltd
www.cps-generators.com